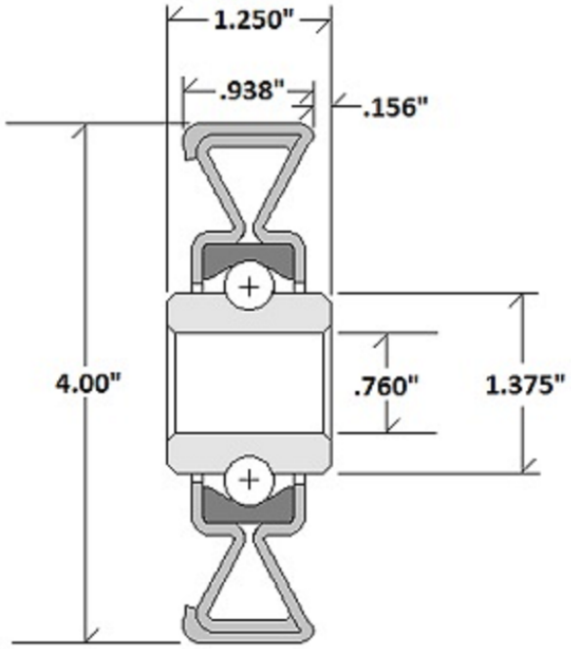

Note:
Bore Length: 1.25"
Load Rating: 300 lbs
Cross Reference: Mathews B4080-1

UNLESS OTHERWISE SPECIFIED: DIMENSIONS ARE IN MILLIMETERS SURFACE FINISH: TOLERANCES: LINEAR: ANGULAR:	FINISH: Zinc Plated				DEBURR AND BREAK SHARP EDGES	DO NOT SCALE DRAWING / REVISION
	NAME	SIGNATURE	DATE			TITLE: Skate Wheel
DRAWN						
CHK'D						
APPV'D						
MFG						
Q.A				MATERIAL: Zinc Plated Carbon Steel		DWG NO. DRAWING / A4
				WEIGHT: 1.9 lbs		SCALE:1:1 / SHEET 1 OF 1